subtext ctarem

Removing the chain tensioner:

Park the bike, with the gear trigger(s) in top gear and high gear(s) engaged (back pedal and forward pedal to engage).

Hub-gear control: on a bike with a Sram 3-spd, press the spring clip C on the adjustor A to disconnect the adjustor from the gear chain: on a bike with a Sturmey hub, slacken off the knurled locknut N and unscrew the barrel B.

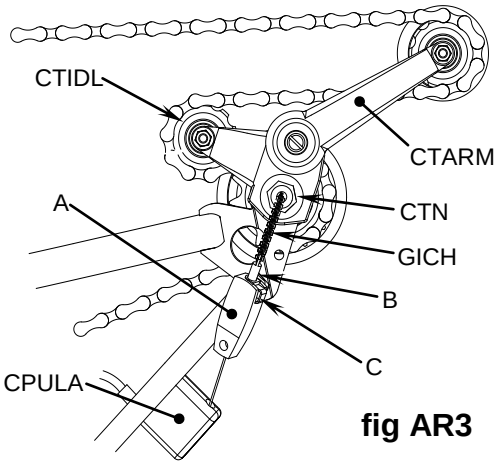

fig AR3

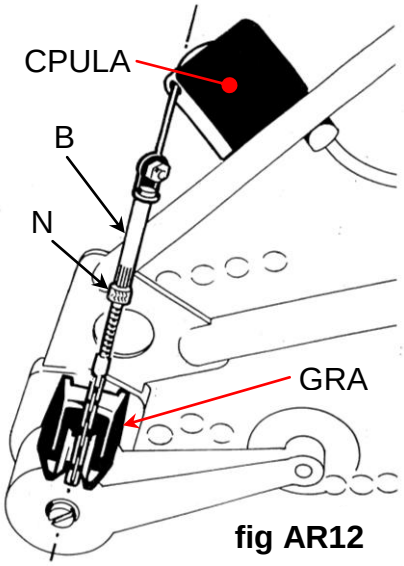

fig AR12

The gear (indicator) chain GICH will be left hanging loose from the end of the axle and should be unscrewed from the hub and withdrawn. On a 5-speed, the guide roller assembly GRA must also be withdrawn from the end of the axle.

Move the sprung arm, CTARM, anti clockwise and lift the chain off; allow the CTARM to move back clockwise until it comes to a stop; undo the securing nut CTN (on a 3/6-speed this is a special nut, and on a 1/2/5-speed it is a standard wheel nut) and remove it together with its washer(s); the chain tensioner assembly may now be removed by drawing it sideways off the end of the axle.

subtext ctafit

Fitting the chain tensioner:

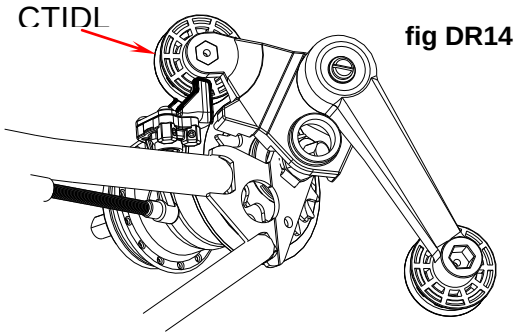

fig DR14

First arrange the chain so that it is running true over both chainwheel and rear sprocket (on a derailleur, providing high gear is selected, this should be the outer sprocket); next, the chain tensioner body has two flanges on its inner face - these pass either side of the axle plate when fitting the chain tensioner; address the chain tensioner to the axle plate and press home, making sure that the fixed idler sprocket CTIDL lies above (with the rear frame inverted) the chain as per fig AR3. For a derailleur bike, the chain and the fixed idler on the chain-tensioner-base, CTIDLB, have to lie between the "uprights" of the chain-pusher-plate: so, with the LH trigger up and the chain-tensioner inclined slightly outwards as in fig DR14 (chain not shown in this figure), feed the idler CTIDLB between these uprights, and then feed the chain-tensioner base onto the rear axle plate till it abuts squarely.

<u>Next secure the chain tensioner:</u>

on a 3-speed, use the chain tensioner nut CTN and its washer. Though similar, the nut and washer needed on a Sturmey hub are different from those for Sram: the Sturmey nut should NOT be done up too tight, a little firmer than hand tight suffices (max torque 5NM). For a Sram hub, up to 8NM.

on a 5-speed, use a standard wheel nut, with the anti-rotation washer under this nut, and with the tab washer (TBW) abutting the chain tensioner. It is essential that the TBW, which provides location for the guide roller assy (GRA) is at the correct angle, such that the GRA aligns with the indicator chain when that is connected to the control cable. To obtain the correct position, screw on the nut, just tight enough to prevent the tab washer from moving: fit the GRA over the TBW, and turn it (and the TBW) clockwise until it points accurately towards the cable pulley assy. (CPULA). Remove the GRA, and do up the nut firmly, but not too tight (torque approx. 10NM): take care not to knock the TBW whilst doing this. Misalignment can cause poor gear selection and damage to the hub.

If fitting a new chain tensioner to a non-derailleur bike, check at this stage whether the idler wheels, CTIDL, are in line with the rear sprocket (fig CT3). If not, then check that the rear sprocket has the correct spacers: if these are OK, then add or remove washers W under the idler wheels.

Now draw up the slack in the chain and feed it over the idler wheel on the sprung arm CTARM (you have to part-fold the rear frame to do this) - check that the chain is flowing correctly when turning the cranks.

Next, for a bike with hub-gears, screw the indicator chain GICH into the hub, and make sure it is fully screwed home. On a 5-speed, fit the GRA and push it home firmly.

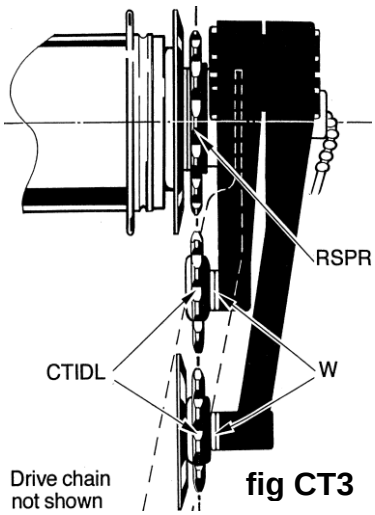

fig CT3

STRIPPING DOWN THE CHAIN TENSIONER ASSEMBLY ITSELF.

When the assembled CTA is off the bike, the swinging arm, CTARM, is being urged by the spring to bear against boss B: before taking it completely apart you have to lift the CTARM away from the base, CTB, and allow it to move clockwise over boss B to the position shown dotted (where the spring is relaxed). The correct procedure is:

- undo the centre screw, S, by 3 turns,
- lift the CTARM and allow the spring to move it round till the spring is relaxed,
- undo screw S completely: be careful not to lose the inner washer W2

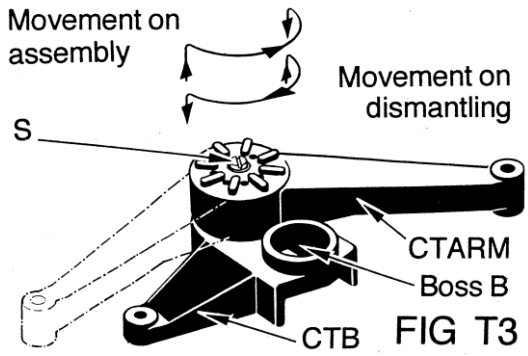

FIG T3

Re-assembly:

Lightly grease the outside of the spacer, CTSP (fig T4), feed the screw S through the washer W1 and the CTSP, and press these through the bore of the CTARM. Hold the CTARM with the inner side upwards (with a finger on the screw S to stop it falling out) and fit the spring into it so that the tongue T1 enters the groove G. Fit the washer W2 over the projecting end of the screw S. It is vital not to omit this washer and to make sure that it does not fall off during assembly.

Address the CTB to the spring (oriented roughly as in fig T4), so that the tongue T2 enters its groove and push it down against the end of the screw S (avoid pushing out the pressed-in nut in the CTB). Do up the screw S by 2 1/2 turns. Now move the CTARM anti-clockwise (as viewed in Fig T3) past boss B, and push it down against the CTB. Finish doing up the screw S, and secure firmly. The two parts of the chain tensioner should now move freely: if they don't, the washer W2 has almost certainly fallen from its place, or else one of the tongues of the spring is not seated correctly.

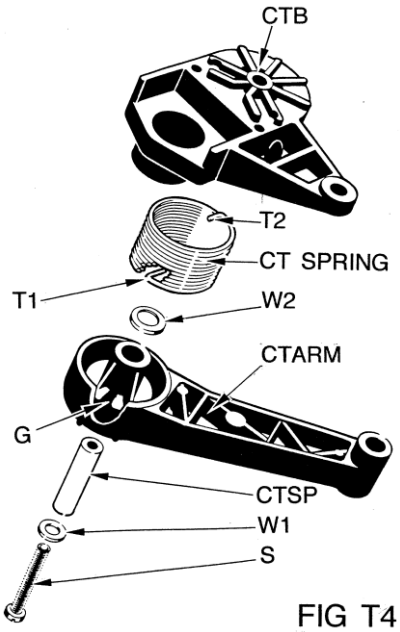

FIG T4

Derailleur chain tensioner idlers etc.

Prise off the cap on the side of the idler wheel with a small screw-driver. Undo the M4 screw (2.5mm hex key), and remove this screw, with the spindle, idler-wheel and washer.

If changing the nut pressed into the moulding, tap it out with a suitable drift, and fit the new one.

On reassembly, smear a little grease on the spindle. Also, **do not forget to fit the large M4 washer under the spindle.**

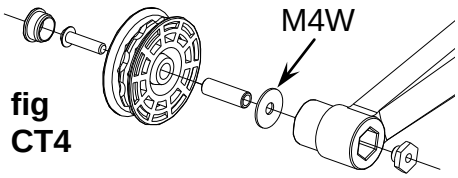

fig CT4

Check that the idler is spinning freely (and moving in/out OK: there should be 7mm of travel).

subtext gadj hub

HUB-GEAR ADJUSTMENT.

Adjustment of the gear control must be carried out with the bike fully unfolded (i.e NOT parked), and with the indicator rod screwed **fully home** into the hub (and backed off not more than half a turn to align with the cable). The aim is to make sure that the indicator rod & chain down at the the rear axle moves to the correct position in response to moving the trigger. For this the cable has to be running well: it must be free of kinks or sharp radii, with the cable pulley rolling freely.

While setting gears, you should ensure that the gear you select by moving the control trigger has indeed engaged in the hub, and to this end, each time you are moving the trigger, keep the wheel spinning forwards, and pedal back and forwards, to ensure the gear engages. It's easiest, when actually altering the setting, to have the cable slack: so select top gear and back and forward pedal a bit first.

If you cannot obtain a satisfactory setting, then the most likely cause is either the cable not running freely, or damage to the indicator chain itself, where it runs into the axle end. Otherwise, the fault may be with the hub internals.

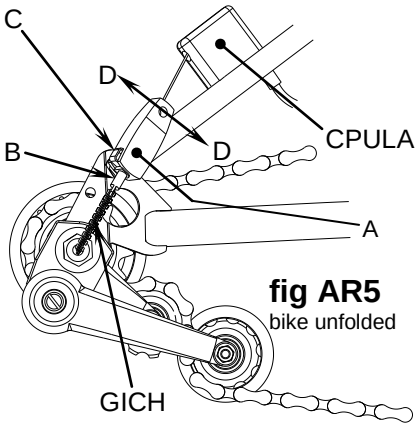

fig AR5
bike unfolded

SRAM 3-spd gear adjustment:.

The cable is made tighter by pushing the adjustor A further onto the grooved end B of the indicator chain GICH: to obtain a looser setting, the spring clip C has to be depressed.

You can usually get things right first time by moving the trigger into top gear, pulling on the adjustor (away from the pulley housing CPULA), and then feeding the grooved end B of the indicator chain into the adjustor until it is just not loose, i.e. *WITHOUT* pulling the indicator chain out of the axle at all. The setting is correct when:-

- with the trigger in top, the cable is just slack (with a *Brompton Y-trigger* fitted, there should be up to 5mm side-to-side movement at D-D, and with a *Sram Torpedo* trigger, rather less), in other words neither flopping around too much, nor taut. If, when you try pulling the adjustor A away from the CPULA, you can see any movement of the indicator chain back into the axle where it enters it, then the setting is too tight, and
- with the trigger in low, the indicator chain (where it enters the end of the axle) should either move not at all, or perhaps up to 1mm, when you pull the adjustor towards the CPULA (if it moves more than this, then the setting is probably too loose: on the other hand, if, while back-pedalling and moving the trigger slowly from mid- to low-position, you see that the indicator chain stops moving out of the end of the axle *before* the trigger has clicked into low-position, then the setting is probably too tight), and
- when pedalling forwards (under no load) and changing through the 3 gears, both up and down, all three gears are positively selected.

STURMEY ARCHER 3-spd & 5-spd adjustment:

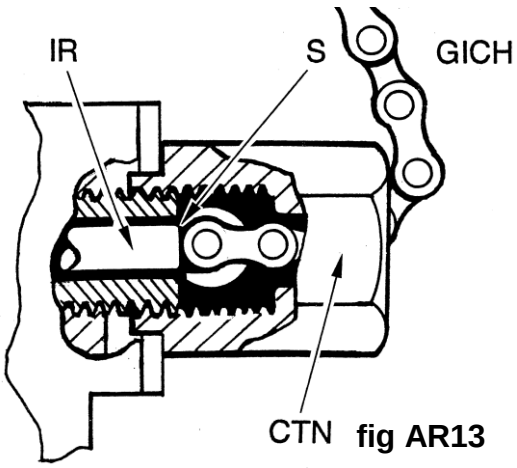

fig AR13

Adjustment is carried out by slackening the lock nut N, turning the barrel B to obtain correct setting, and relocking the nut N. Ensure the indicator rod is the correct length for the hub-type.

3-speed. Engage top gear, then move the control trigger to the middle position: the step, S, towards the end of the indicator rod, IR, should be level with the end of the axle, visible

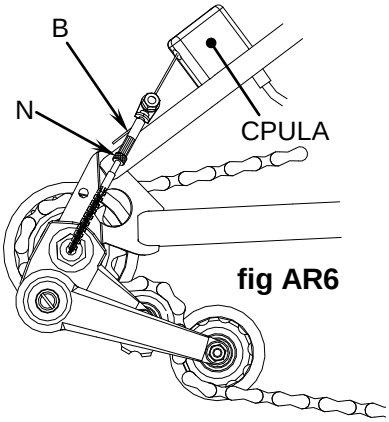

fig AR6

through the hole in the CTN. Next, select bottom gear, then middle, then top, and check that all three are engaging correctly.

5-speed, fig AR15 (Note: the GRA must be aligned with the cable/indicator-chain, fig AR12). Engage top gear, then move the control trigger to position 2 (2nd bottom gear): the annular groove, SR, coloured red or blue, towards the end of the indicator rod, should lie level with the end of the axle. Next change down and then up through all the gears, and check that all gears engage cleanly, fine tuning the setting if needed. In practice, you may find that, with the gears functioning correctly, the groove SR lies (when in 2nd gear) somewhere between the end of the axle and 1.5mm out from the end of the axle (i.e. a slightly tighter setting): but bear in mind that, when in top, the indicator chain, GICH, should be just slack. Next, test the gear selection under load by riding the bike, again changing down and up through all the gears.

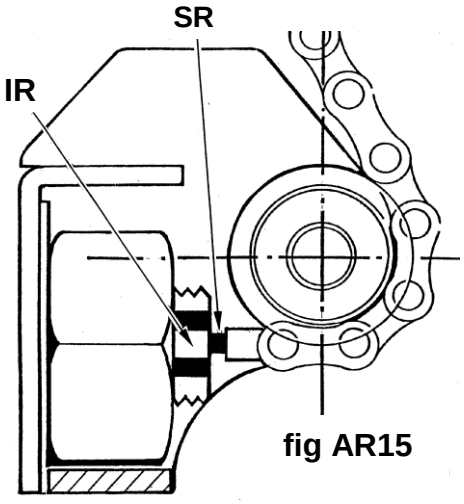

fig AR15

subtext gadj dr modified

DERAILLEUR ADJUSTMENT.

After any changes or maintenance on the rear frame fittings or wheel, the settings should be checked, using the derailleur stop screws for adjustment.

You should also be aware that, for satisfactory gear changes and smooth running, apart from these stop screws, two key elements of the system have to move freely: the actuator (or "chain-pusher"), and both idlers on the chain tensioner.

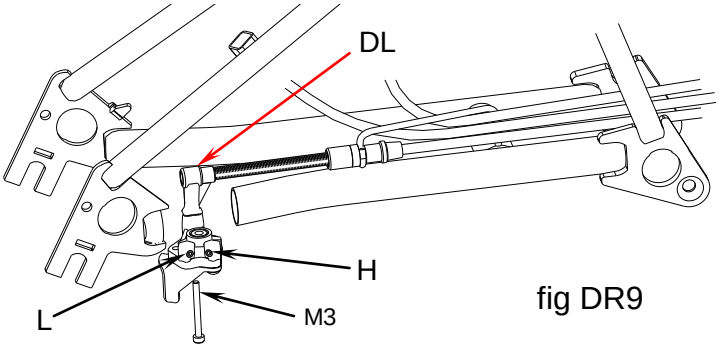

fig DR9

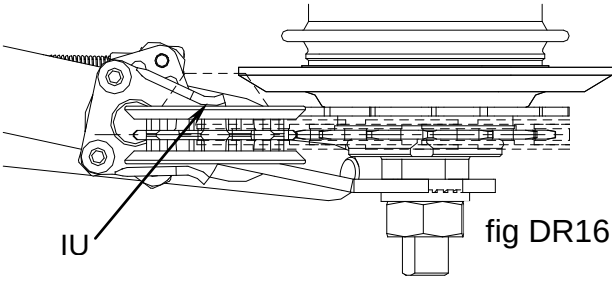

fig DR16

Chain pusher adjustment.

Use the stop screws, fig DR9, on the chain pusher. The idea is that, in high gear, the inner face of the inner upright IU, fig DR16, shall be as close as possible to the idler wheel, without any rubbing pressure while the idler rotates (to give the slickest change with minimum wear): when the setting is right, you should just be able to see daylight between the two while turning the cranks *forwards*, perhaps with occasional contact. Use a 2mm hex key in the forward stop screw H for adjustment.

The same principle applies for the lower gear setting, only this time, fig DR17, the inner face of the outer upright OU has to just not rub on the idler, and the rear stop screw L is used for adjustment.

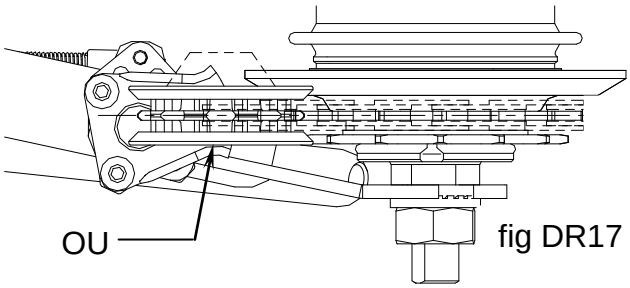

fig DR17

Cable adjustment should seldom be necessary, as the trigger moves the cable twice as far as the movement of the chain-pusher (an over-ride spring *inside* the dogleg DL absorbs this movement).

If you have problems obtaining slick derailleur gear changes, refer to the Dealer or Owner Manual for some tips.